THE MINI COLORING CAR.

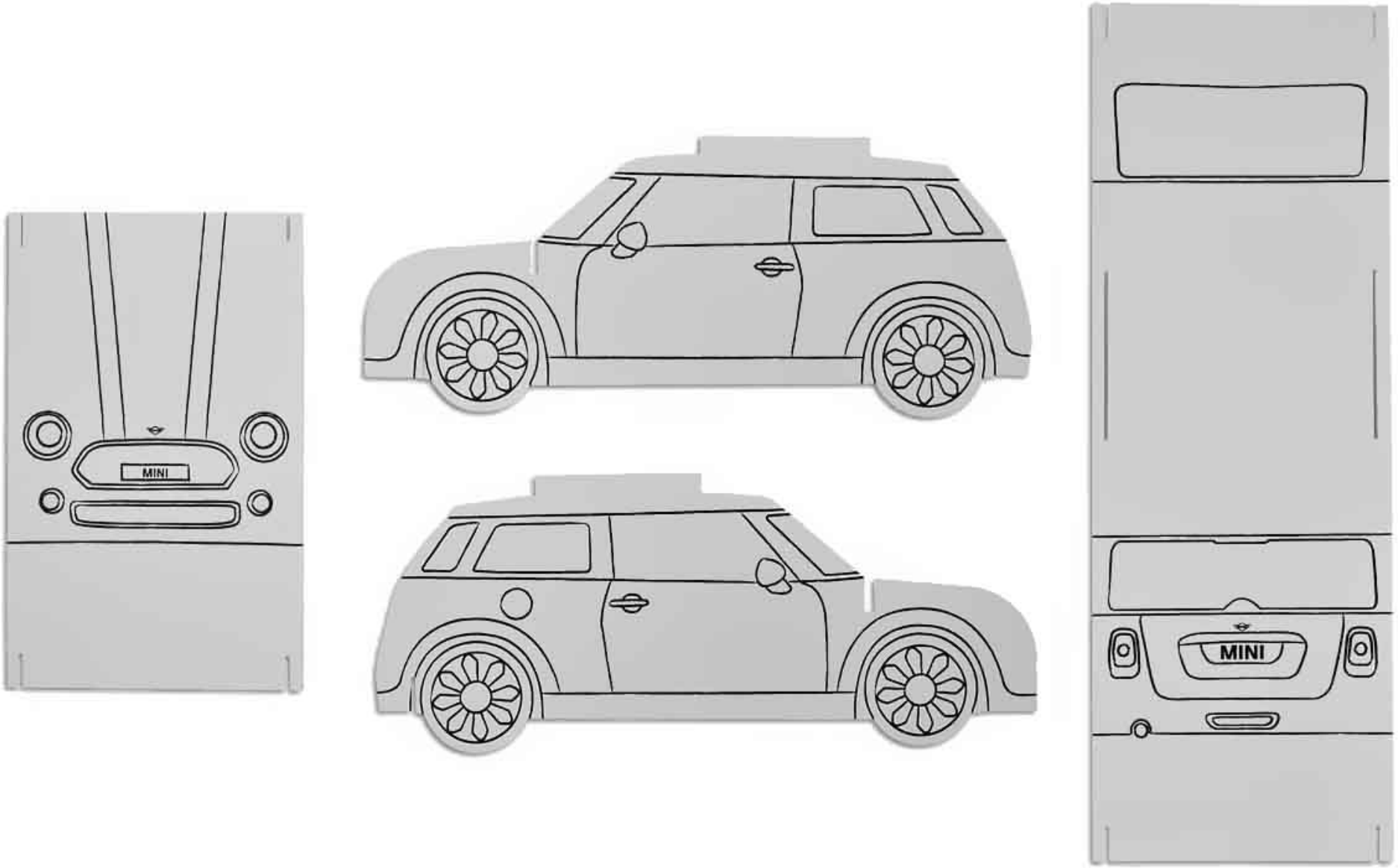

THE MINI COLORING CAR.

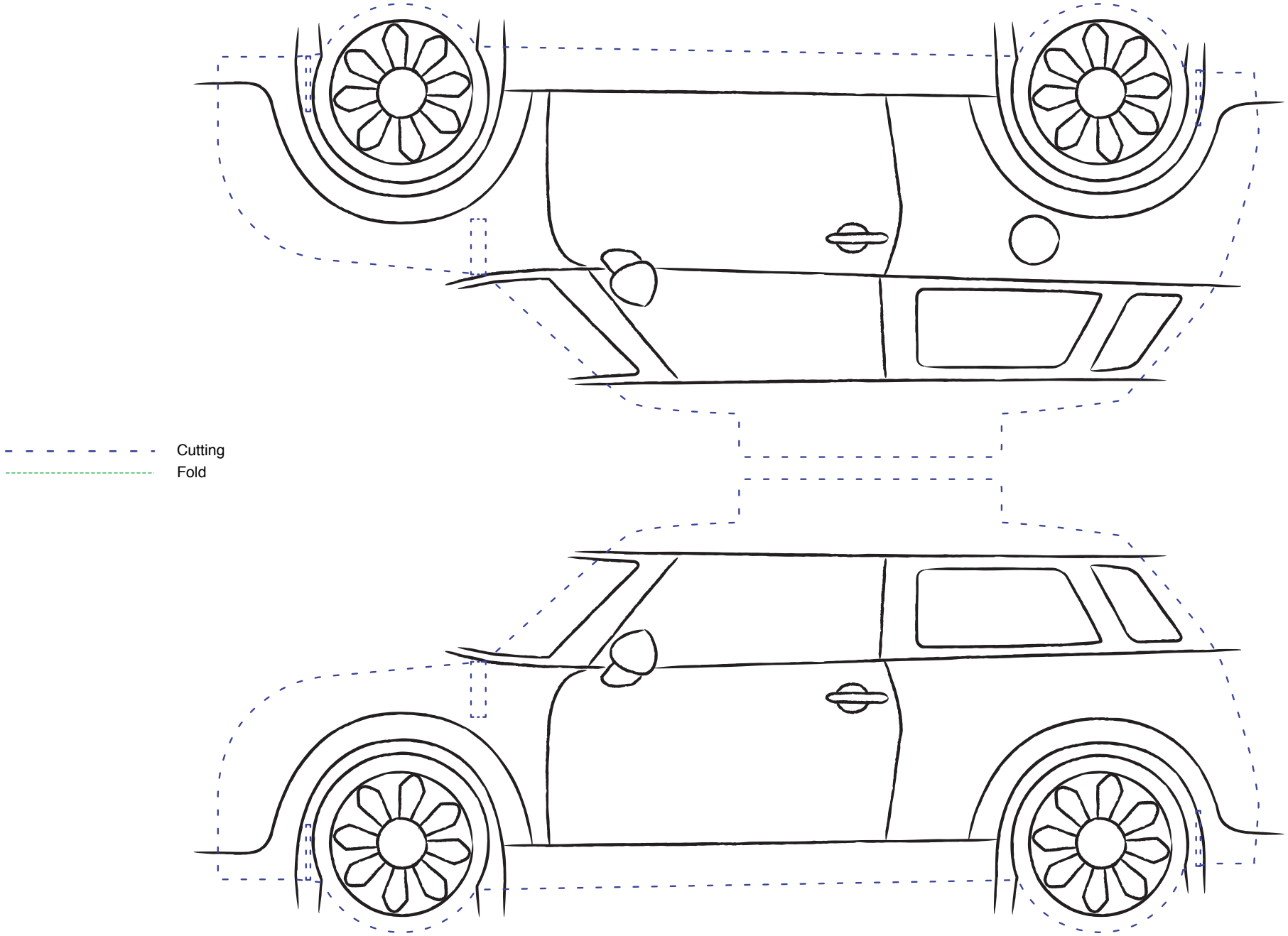

THE MINI COLORING CAR.

Cutting
Fold

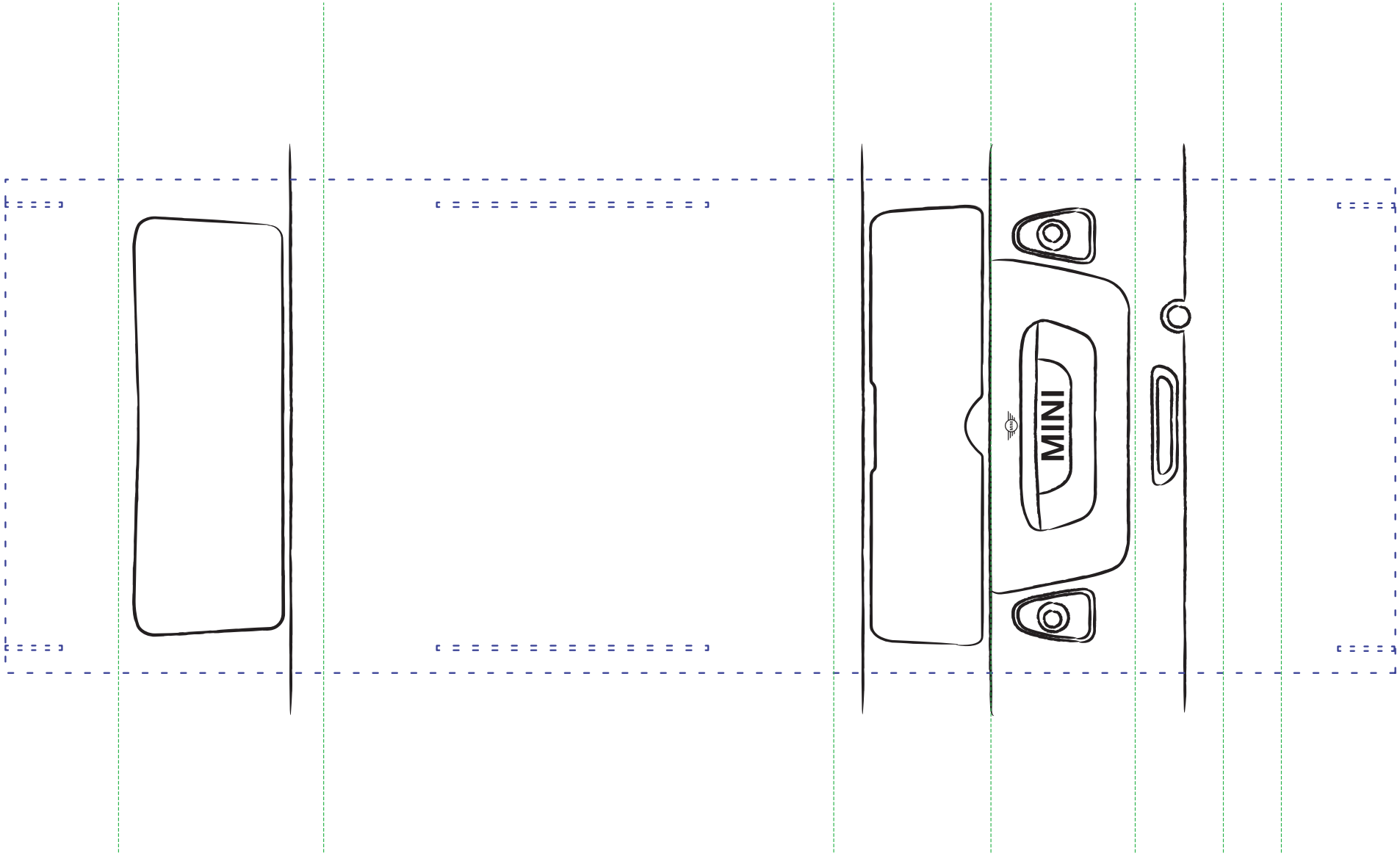

THE MINI COLORING CAR.

Cutting
Fold

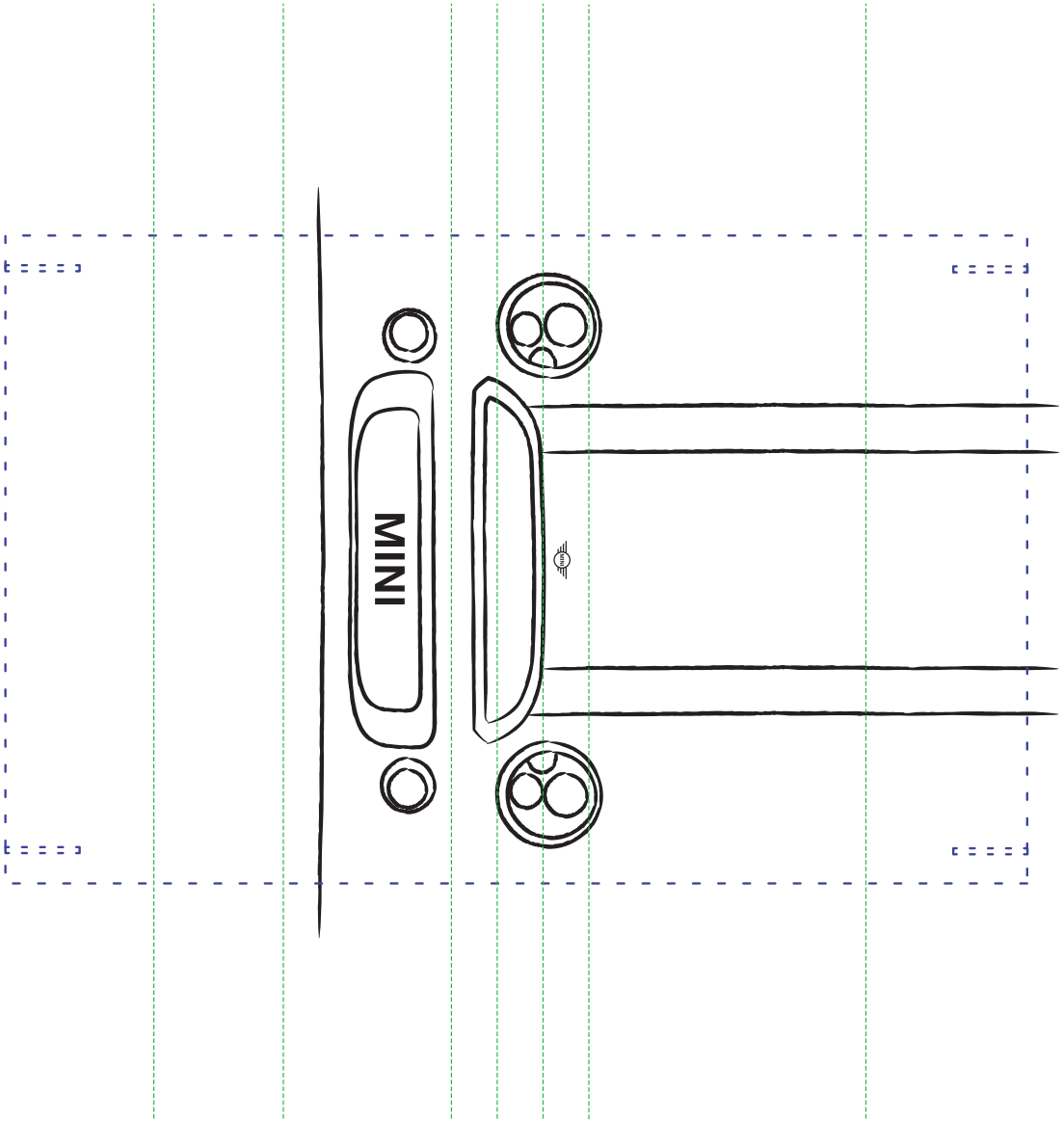

THE MINI COLORING CAR.